PLAY SAFE® triple

Playsafe triple

Comparison of Playsafe triple and Playsafe heavy-pro

Playsafe heavy-pro

PLAY SAFE®

ERKODENT®

Structure of Playsafe triple:

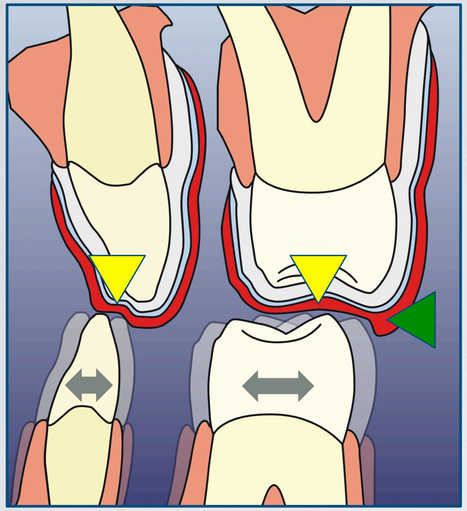

Thermoform once a Playsafe triple foil and get the buccal shield ◀ as protection against lateral impacts and an articulation surface ▼ for comfortable freedom ↔ for the lower jaw.

Playsafe triple foil 5.5 mm, prelaminated:

Erkoflex 2.5 mm, soft • Erkoflex 2.0 mm, soft

*Triple layer 1.0 mm, hard

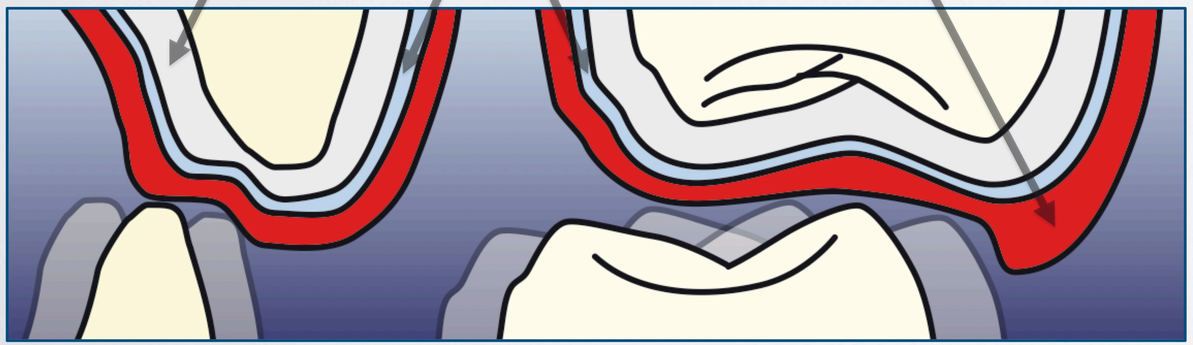

*Triple layer, COC (cyclo-olefin-copolymer)

Structure of Playsafe heavy-pro:

Thermoform one layer after the other.
First Erkoflex 2.0 mm, soft, second Erkodur-S 0.8 mm, hard, third Erkoflex 4.0 mm, soft.
The buccal shield ◀ and the articulation surface ▼ is ground afterwards.

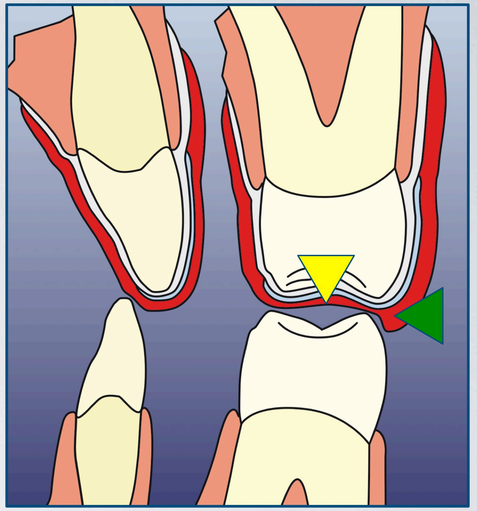

Erkoflex 2.0 mm, soft • Erkoflex 4.0 mm, soft

Erkodur-S 0.8 mm, hard

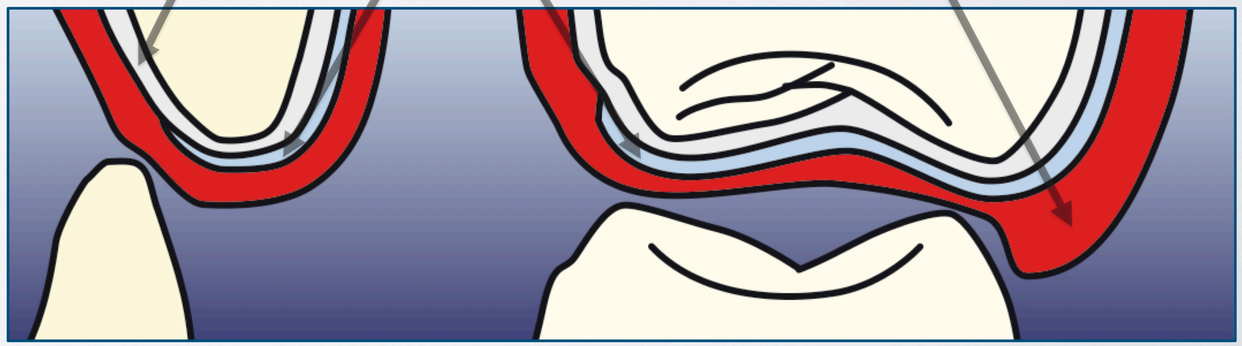

ERKODENT®

PLAY SAFE® triple

PLAY SAFE® heavy-pro

Comparison of weight, volume and incisal thickness at tooth 21

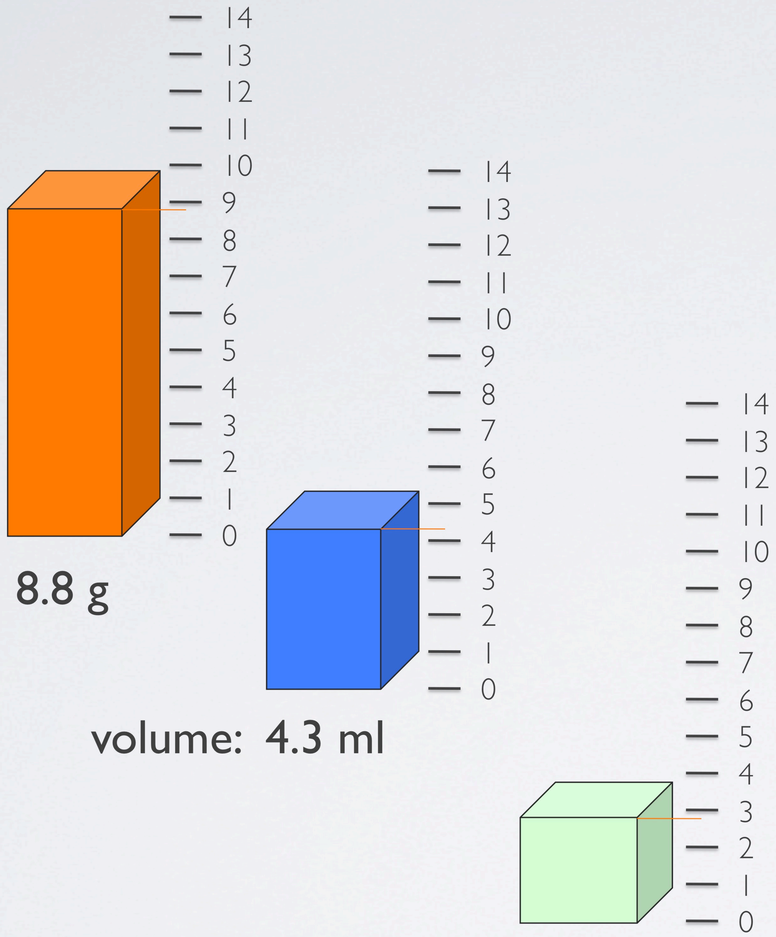

weight: 8.8 g

volume: 4.3 ml

Ø 3 measurements: 2.8 mm
incisal thickness at tooth 21

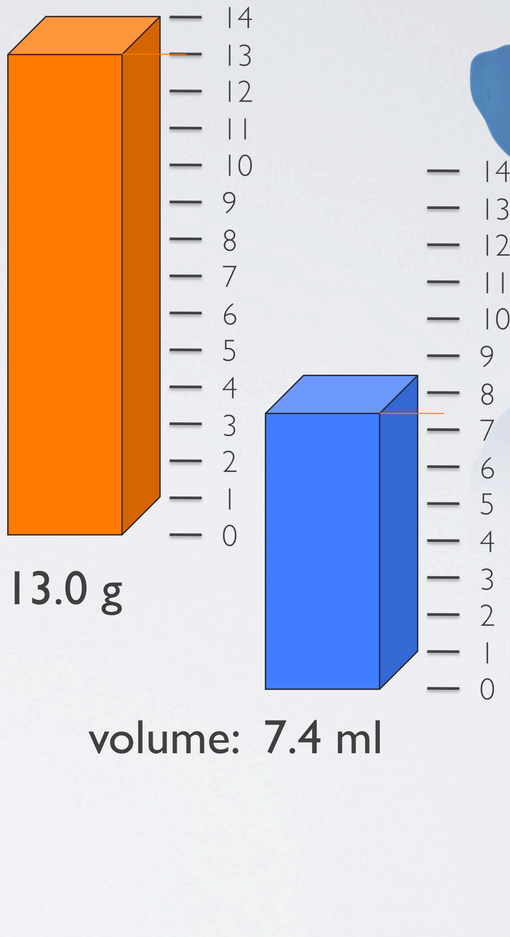

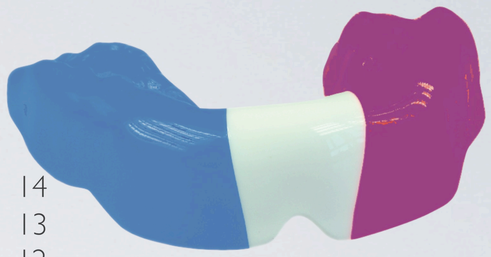

weight: 13.0 g

volume: 7.4 ml

Ø 3 measurements: 3.5 mm
incisal thickness at tooth 21

ERKODENT®

PLAY SAFE® triple

PLAY SAFE® heavy-pro

Comparison of deformation of 1.25 and 2.0 mm

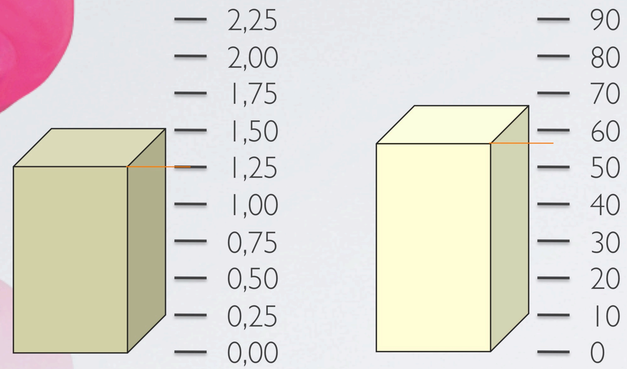

Deformation 1.25 mm • Power 57 N

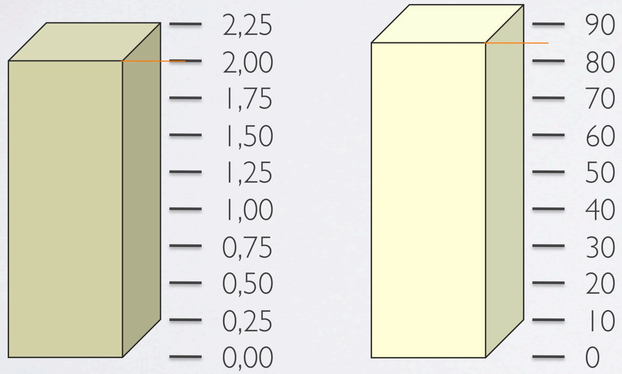

Deformation 2.0 mm • Power 85 N

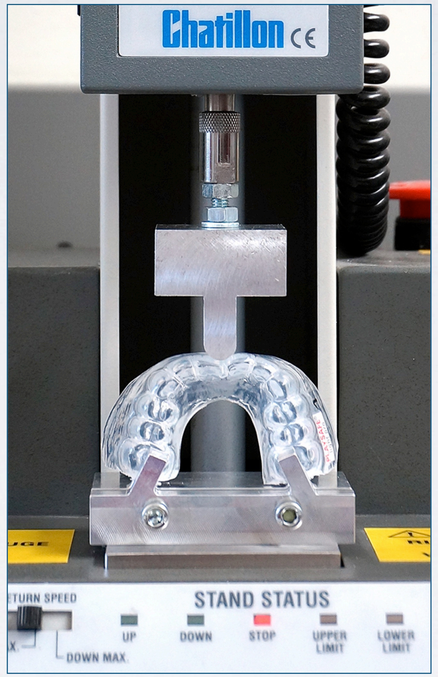

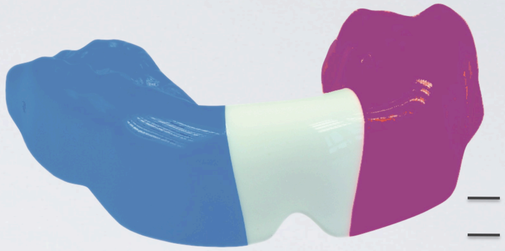

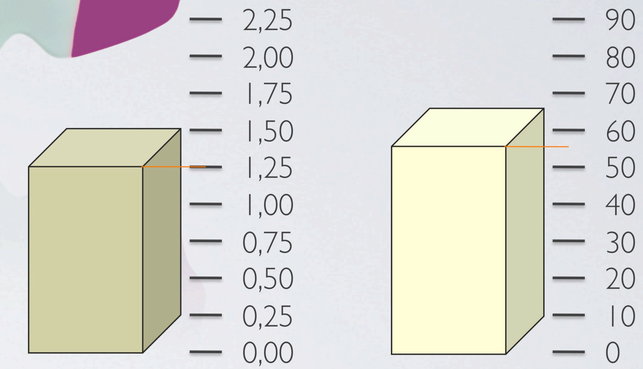

Deformation 1.25 mm • Power 56 N

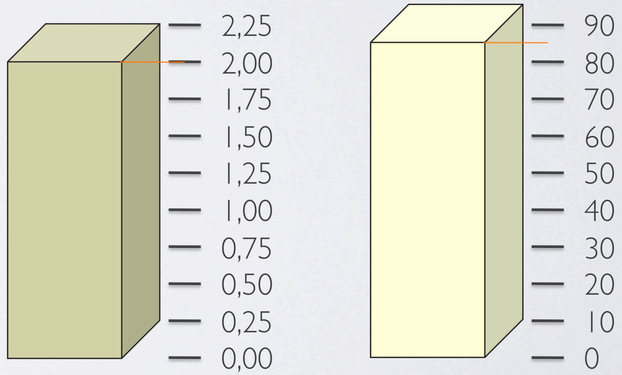

Deformation 2.0 mm • Power 86 N

ERKODENT®

PLAY SAFE® triple

PLAY SAFE® heavy-pro

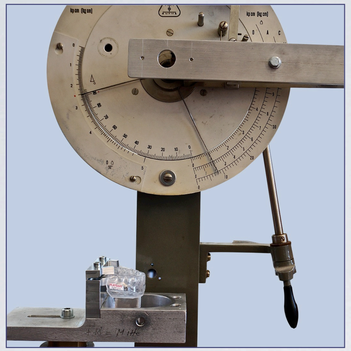

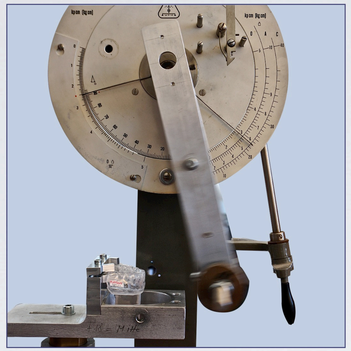

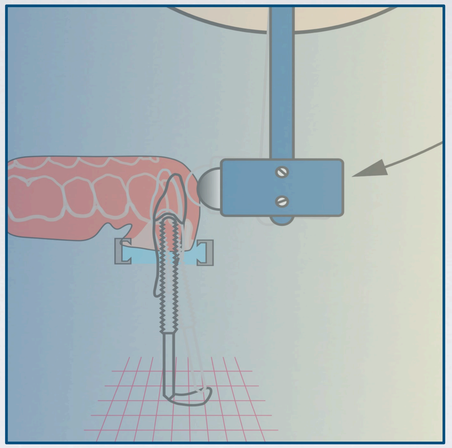

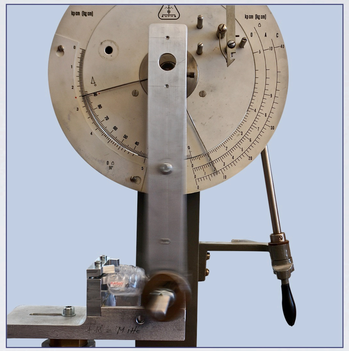

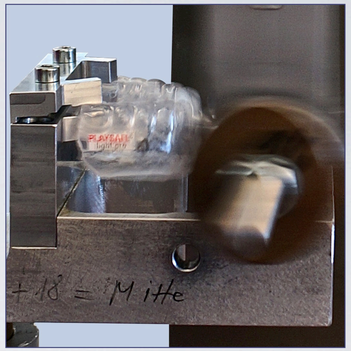

The pendulum test measures the deformation at the teeth 21, 24 and 26. Power distribution and absorption can be calculated.

Comparison of deformation teeth 21, 24, 26
Ø of several measurements

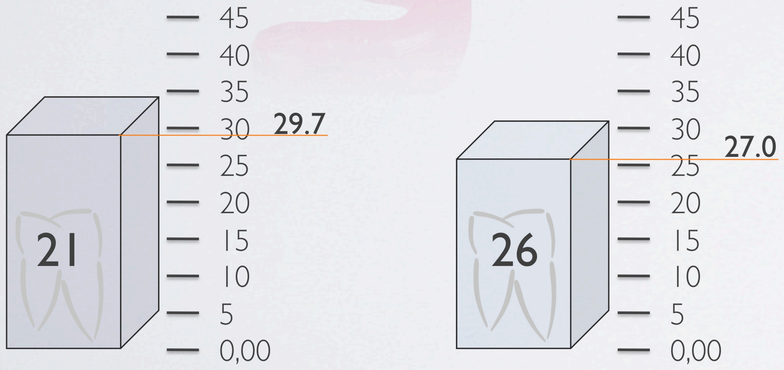

Deformation in mm* • Pendulum weight 1.5 Nm (637 g)

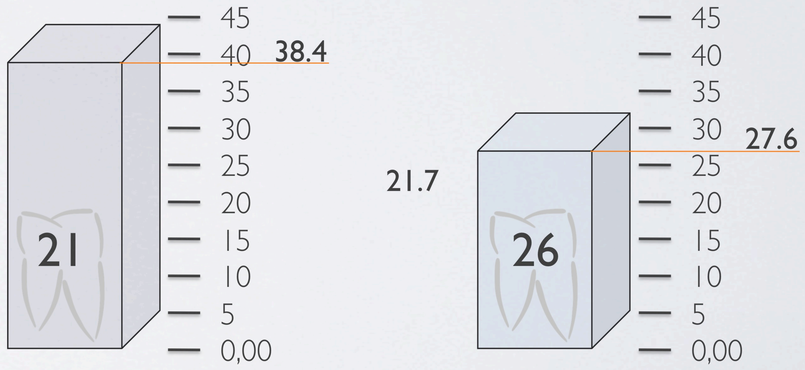

Deformation in mm* • Pendulum weight 1.5 Nm (637 g)

* to better distinguish the deflections were multiplied by virtual extension of the roots.

ERKODENT®
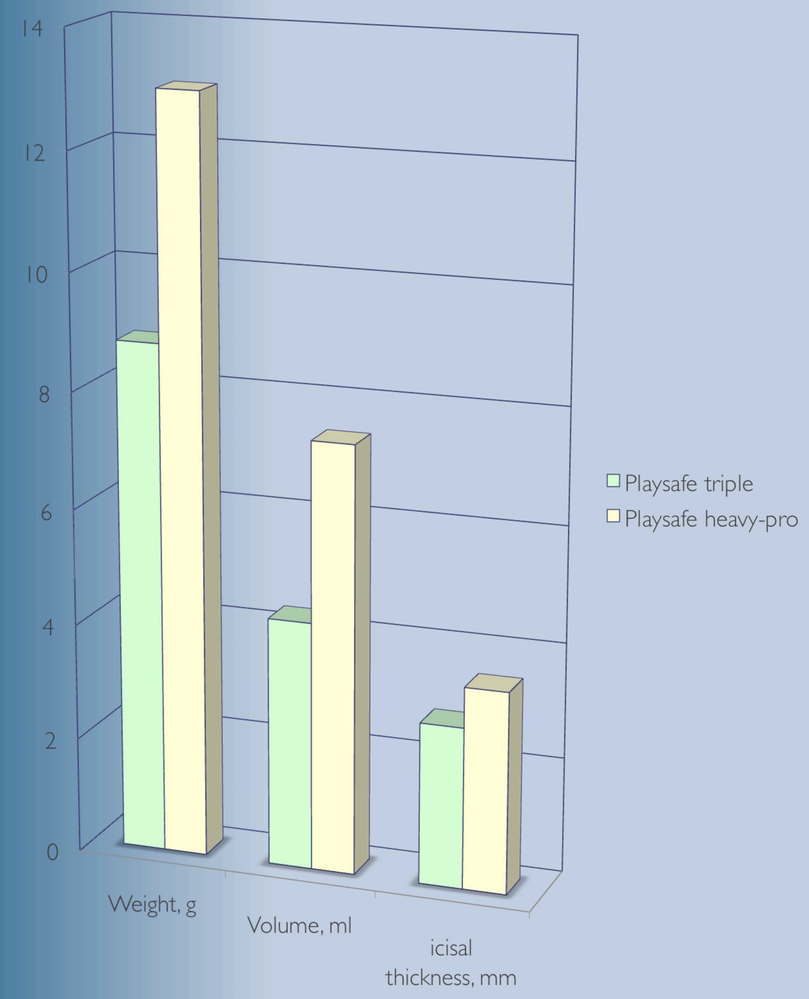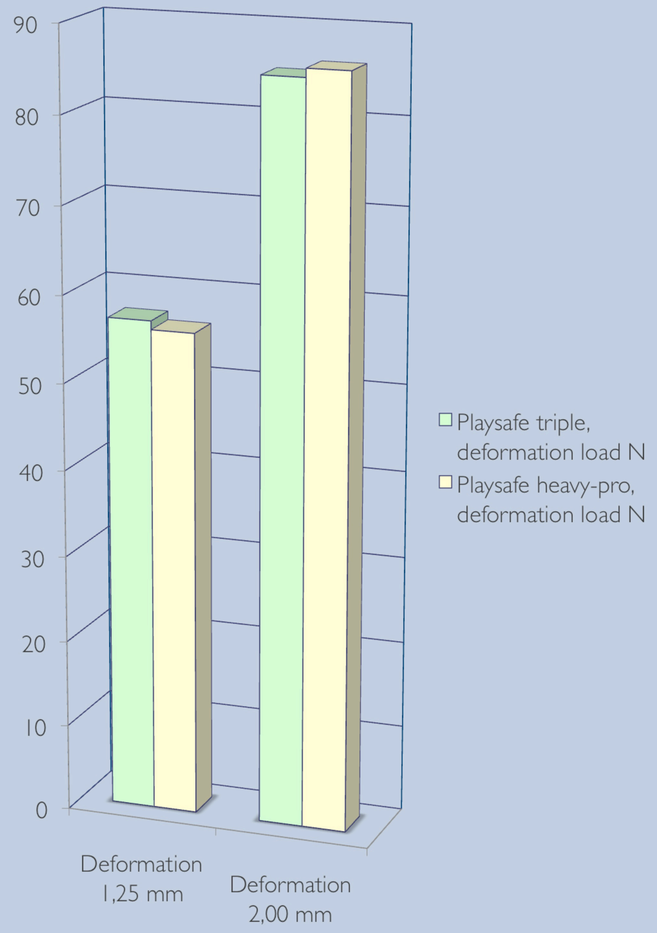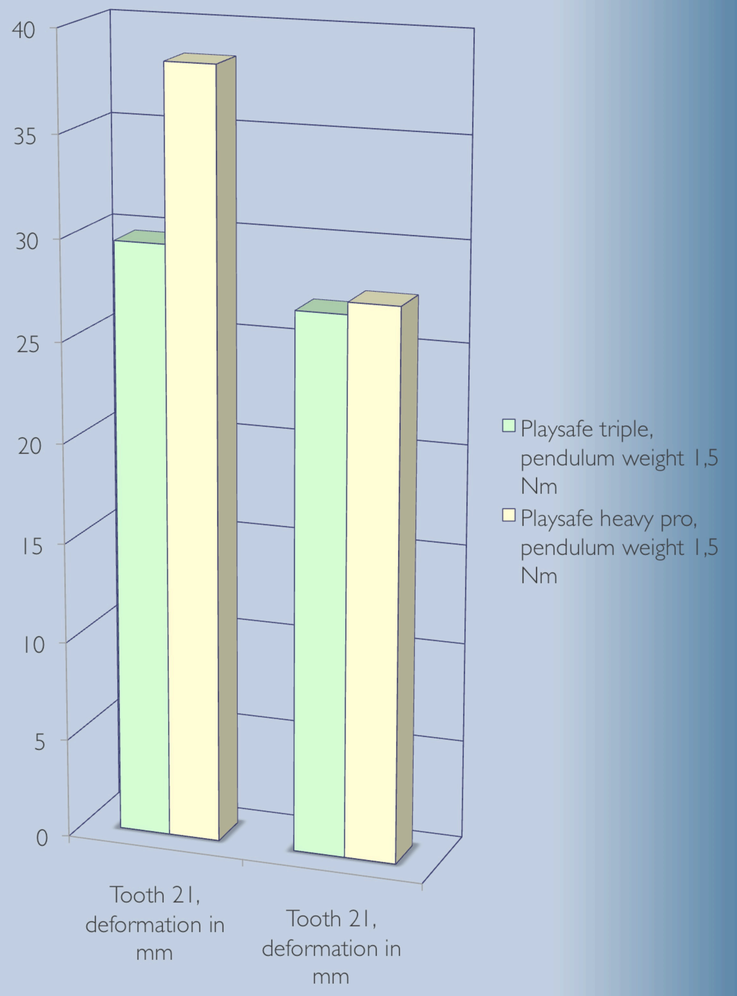
Comparison summary